由 Autodesk 教育版产品制作

* ROHS COMPLIANT

RoHS Compliant Pb

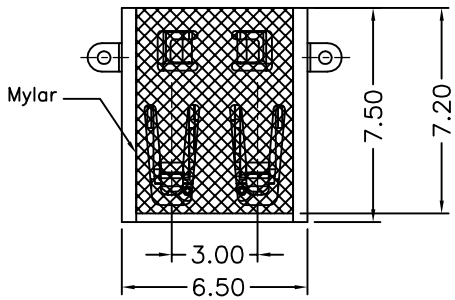

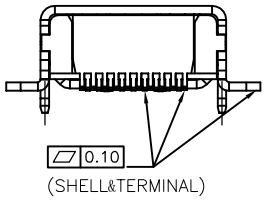

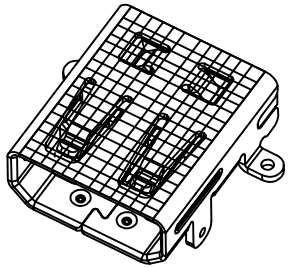

Specification

MATERIAL:

Insulator: High Temperature Thermoplastic,
Contact: Copper Alloy
SHELL: Copper Alloy

PLATING:

Contact: Plated 50u Ni Over all Contact Au 1u,PAD Gold
Shell: all NI 50u

NOTE:
1.MATERIAL AND FINISH SEE THE TABLE.
2.MECHANICAL CHARACTERISTICS
INSERTION FORCE: 44.1N MAX
EXTROCTION FORCE: 5N MIN(AFTER 5000 CYCLES 3N MIN.), 25N MAX.
MATING CYCLE:5000 CYCLES
3.ELECTRICAL CHARACTERISTICS
RATING CURRENT: 0.5A
RATING VOLTAGE: 40V
CONTACT RESISTANCE: 10 MILLOHMS OHMS MAX (EXCLDUING CONDUCTOR RESISTANCE)
INSULATION RESISTANCE:
a, UNMATED: 100M OHMS MIN AT 500 VDC
b, MATED: 10M OHMS MIN AT 150 VDC
DIELECTRIC WITHSTANDING VOLTAGE:
250V AC/1MINUTE
OPERATING TEPERATURE: -20°C--+85°C
STORAGE TEMPERATURE: -20°C--+65°C

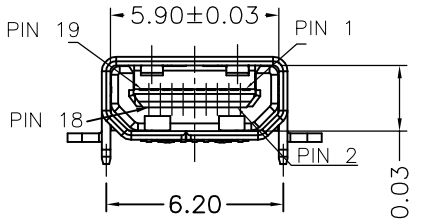

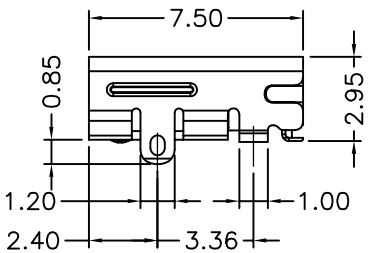

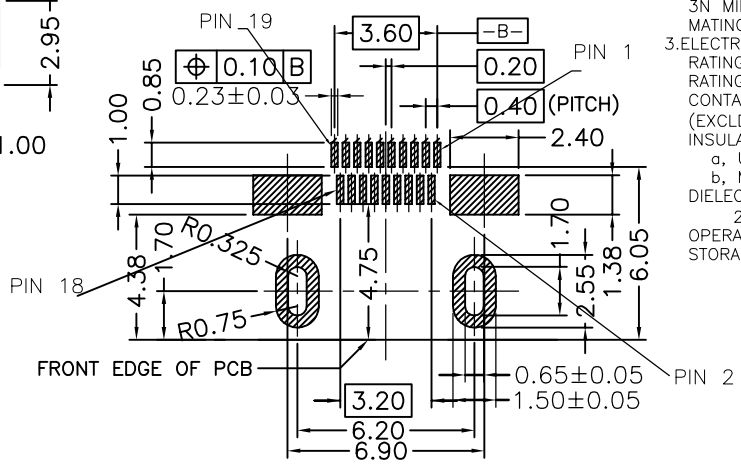

RECOMMENDED PCB LAYOUT(.XX±0.05)
CONNECTOR SIDE(TOP VIEW)

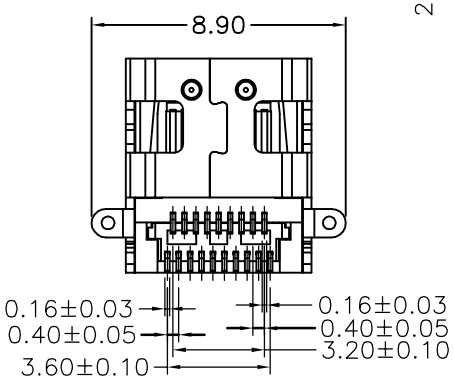

PIN	Signal Assignment	PIN	Signal Assignment
1	Hot Plug Detect	2	Utility
3	TMDS Data2+	4	TMDS Data2 Shield
5	TMDS Data2-	6	TMDS Data1+
7	TMDS Data1 Shield	8	TMDS Data1-
9	TMDS Data0+	10	TMDS Data0 Shield
11	TMDS Data0-	12	TMDS Clock+
13	TMDS Clock Shield	14	TMDS Clock-
15	CEC	16	DDC/CEC Ground
17	SCL	18	SDA
19	+5V Power		

REVISION NO.	ECR NO.	DESCRIPTION	MARK	DATE

XNT

深圳市鑫南天科技有限公司
Shenzhen XinNanTian Technology Co., Ltd

DIMENSIONS INIT: mm
UNLESS OTHERWISE SPECIFIABLE

DIMENSION	TOLERANCE
X.X: ±	0.38
X.XX: ±	0.25
X.XXX: ±	0.10
ANGULAR: ±	1°

PRODUCT NAME : HDMI D TYPE 19P 外壳前插后贴 端子SMT	DRAWING: COCO	DATE: 2014/01/15	
PRODUCT NO. : XNT-HDMID19-890	CHECK: AG	DATE: 2014/01/15	
DRAWING NO. : XNT-00129	APPROVED: JEFF	DATE: 2014/01/15	
	SCALE: NA	DWG ID: P D	REV.: A / PAGE: 1 OF 1

版板所有为：深圳市鑫南天科技有限公司，网址：http:www.SZXNT.com
由 Autodesk 教育版产品制作
由 Autodesk 教育版产品制作
由 Autodesk 教育版产品制作